REV	ECN NO.	DESCRIPTION	DRN	APPD	DATE

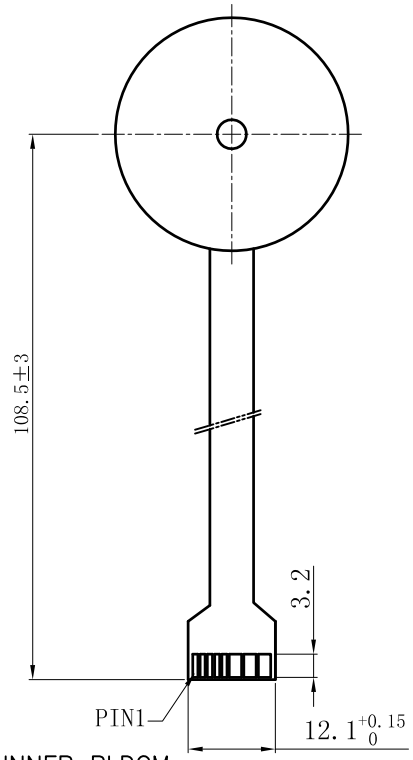

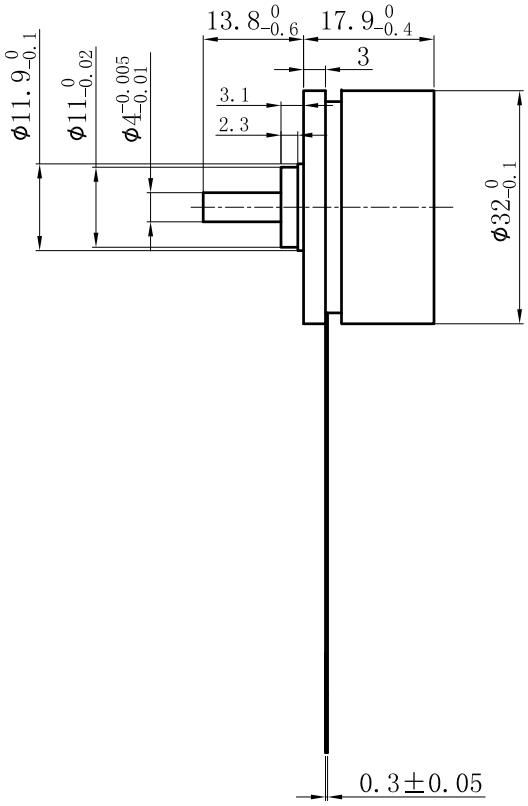

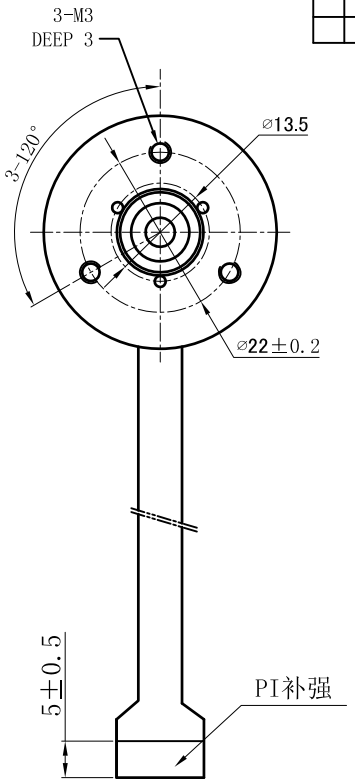

THREE-PHASE CONNECTING

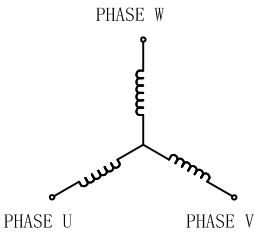

CW from shaft side

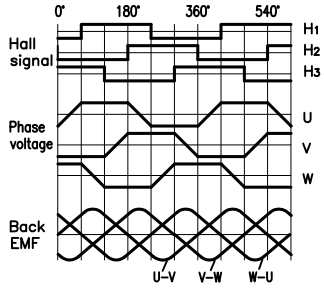

HALL CONNECTION

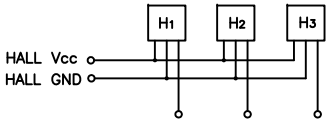

OUTRUNNER BLDCM

NUMBER OF PHASE	绕组相数	3
NUMBER OF POLES	极数	8
LINE TO LINE RESISANCE	线电阻	3.2±10% ohms@20℃
LINE TO LINE INDUCTANCE	线电感	1.2±20% mH@1kHz
NOMINAL VOLTAGE	额定电压	9 VDC
NO LOAD SPEED	空载转速	3750±10% RPM
NO LOAD CURRENT	空载电流	<0.3 A
RATED TORQUE	额定转矩	24.6 mN.m
RATED SPEED	额定转速	2100±10% RPM
RATED CURRENT	额定电流	1.07 A
PEAK TORQUE	峰值转矩	73.8 mN.m
PEAK CURRENT	峰值电流	3.2 A
BACK EMF CONSTANT	反电势常数	1.7 Vrms/kRPM
TORQUE CONSTANT	转矩常数	23 mN.m/A
INSULATION CLASS	绝缘等级	B 130℃
DIELECTRIC STRENG	介电强度	600VAC 1SEC
INSULATION RESIST	绝缘电阻	100MOhm @500VDC
ROTOR INERTIA	转子转动惯量	35 g.cm²
WEIGHT	重量	50 g
OPERATION AMBIENT	使用环境	Ambient temperature:-20...+50° C,humidity Max. 85%(No condensation)
STORAGE AMBIENT	存储环境	Ambient temperature:-20...+85° C,humidity Max. 85%(No condensation)

Wires for Phases FPC		
PHASE U	PHASE V	PHASE W
PIN8	PIN7	PIN6

Wires for HALL FPC				
HALL Vc	Hu	Hv	Hw	HALL Gnd
PIN1	PIN3	PIN4	PIN2	PIN5

PERMISSIBLE RADIAL+AXIAL FORCE

AXIAL-FORCE	轴向压力	Fa=4.8 N Max
DISTANCE	距离	a=5 mm
RADIAL-FORCE	径向压力	Fr=14 N Max
SHAFT RADIAL PLAY	径向间隙	0.02mm Max.@4N
SHAFT AXIAL PLAY	轴向间隙	0.14mm Max.@4N

REV	ECN NO.	DESCRIPTION	DESIGN	DATE	P/N.	
					TITLE	Specifications
UNLESS OTHERWISE SPECIFIED TOLERANCES DECIMALS: .x ±0.5, .xx ±0.25, .xxx ±0.1 ANGULAR: ±0° 30' UNIT: mm DO NOT SCALE DRAWING	MATERIAL	CONTR	CHECK		USED ON	FL32BLW18-9V-3706A
			APPD		DWG NO.	REV A
	FIRST ANGLE PROJECTION		SCALE 1:1 SHEET 1 OF 1		FULLING MOTOR	